zepworldwide

World leader in transformer accessories and premould connectors

EN 50386 1.2kV Bushing Assembly Catalogue:

ZEP catalogue of EN 50386 Bushing Assemblies is a complete range covering current ratings of 250A to 6500A at 1.2kV

The EN50386 LV units are fully interchangeable with the equivalent DIN standard units allowing design engineers more options without having to change tank design.

The EN design is superior to the DIN units in that the number of sealing gaskets is reduced from 3 to 2 in designs up to and including 3150A meaning a 33% lower risk of leaks.

The E cap is a larger diameter affording more weather protection (UV) to the J gasket over the DIN design therefore reducing the possibility of gasket cracking.

ZEP range offers both the traditional porcelain bottom insulator and a Nylon reinforced bottom insulator option. The Nylon Insulator versions do not require the use of internal spacer gaskets meaning reduction components and assembly time.

The Spade Design is available for all models up to 6500A but we have retained the traditional connections as per the DIN standards.
The Spade designs can be connected by means of Rivets allowing faster connection times.

Benefits at a glance of the EN Bushing Range:

- **Lower Price** than the equivalent DIN sizes
- **Less Sealing Gaskets (250A – 3150A)** Reduction in risk of leaks by 33%
- **Less Components** Reducing the assembly time.

Bushing Ratings:

Bushing Type	Highest System Voltage (Um)	Rated Current (Ir)	Power frequency Withstand Voltage (Wet / Dry)	Lightening Impulse Voltage (BIL)	Minimum Creepage Distance	Minimum Cantilever Load
EN1-250 series	1.2kV	250A	10kV	20kV	55mm	400N
EN1-630 series	1.2kV	630A	10kV	20kV	70mm	500N
EN1-1000 series	1.2kV	1000A	10kV	20kV	75mm	600N
EN1-1250 series	1.2kV	1250A	10kV	20kV	75mm	600N
EN1-2000 series	1.2kV	2000A	10kV	20kV	75mm	1000N
EN1-3150 series	1.2kV	3150A	10kV	20kV	75mm	1600N
EN1-4000 series	1.2kV	4000A	10kV	20kV	85mm	1600N
EN1-5000 series	1.2kV	5000A	10kV	20kV	85mm	1600N
EN1-6500 series	1.2kV	6500A	10kV	20kV	85mm	1600N

zepworldwide
World leader in transformer accessories and premould connectors

Recommended Tightening Torque for Bushing Assemblies

Current Rating	Size	Torque
250A	M12	13Nm
630A	M20	30Nm
1000A	M30x2	70Nm
1250A	M30x2	115Nm
2000A	M42x3	150Nm
3150A	M48x3	200Nm
4000A	M55x3	200Nm
5000A	M64x3	200Nm
6500A	M75x3	200Nm

Note: *The above recommended torque values are ±10% depending on the quality of the tank surface.*

Recommended Tightening Torque on the Locking Bolts of the Terminal Flags

Bolt Size	Torque
M10	25Nm
M12	40Nm
M16	90Nm

zepworldwide
World leader in transformer accessories and premould connectors

EN 50386 - 1kV, 250A and 630A Versions

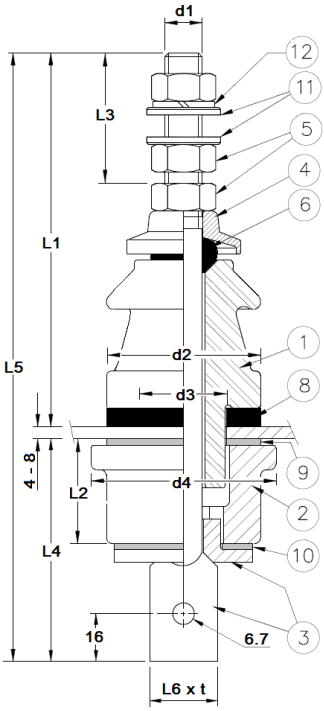

FIGURE 1

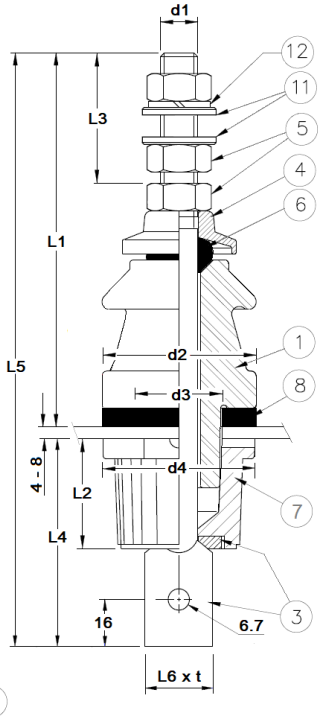

FIGURE 2

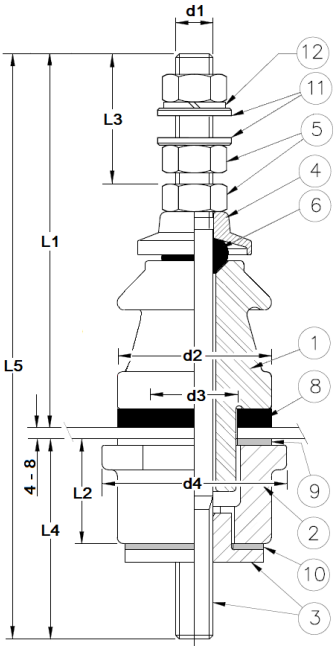

FIGURE 3

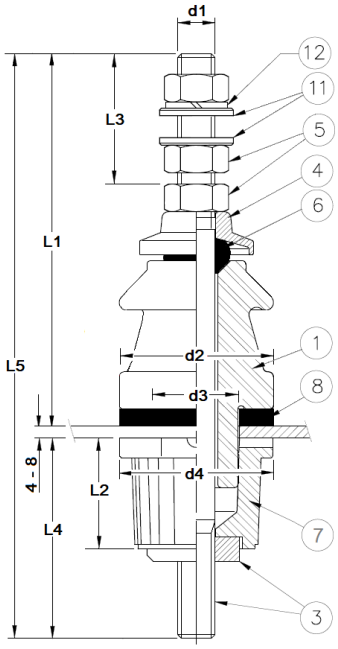

FIGURE 4

ZEPWW TYPE	FIGURE	kV	CURRENT	L1	L2	L3	L4	L5	L6	t	d1	d2	d3	d4
EN1-250-AP	1	1	250A	125	32	51	72	197	22	4.5	M12	50	28	60
EN1-250-APP	2	1	250A	125	36	51	68	197	22	4.5	M12	50	28	50
EN1-250-SP	3	1	250A	125	32	51	65	188	-	-	M12	50	28	60
EN1-250-SPP	4	1	250A	125	36	51	65	194	-	-	M12	50	28	50
EN1-630-AP	1	1	630A	162	32	62	80	245	35	8	M20	70	45	85
EN1-630-APP	2	1	630A	162	36	62	80	245	35	8	M20	70	45	70
EN1-630-SP	3	1	630A	165	32	65	80	249	-	-	M20	70	45	85
EN1-630-SPP	4	1	630A	165	36	65	80	249	-	-	M20	70	45	70

Position	DESCRIPTION	Position	DESCRIPTION	Position	DESCRIPTION
1	Porcelain	5	NUT	9	"O" Gasket
2	Porcelain	6	"J" Gasket	10	"P" Gasket
3	Terminal Stud	7	Insulator	11	washer
4	E Cap	8	"N" Gasket	12	Spring Washer

EN 50386 - 1kV, 250A and 630A Versions continued:

AIR SIDE VARIATIONS 250A & 630A

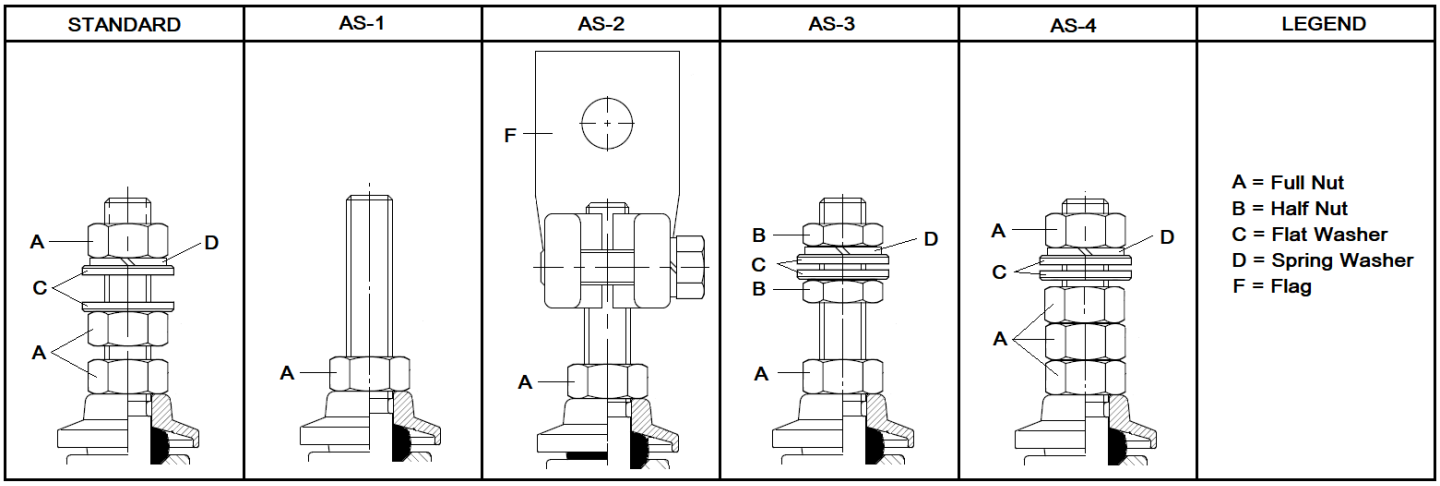

OIL SIDE VARIATIONS 250A & 630A

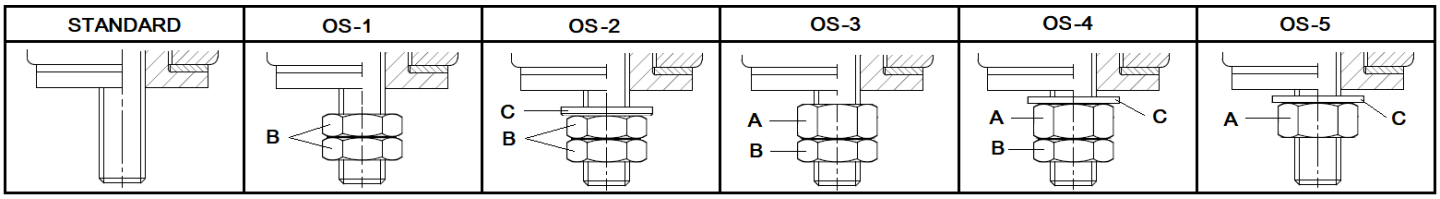

Ordering Instructions for 250A and 630A EN 50386 Assemblies:

Step 1 - Select Bushing Current Rating
Step 2 – Select ZEP Bushing Type – e.g: Figure 1
Step 3 – Select Air Side Variation if different to that shown in Figure 1
Step 4 - Select Oil Side Variation if different to that shown in Figure 1

Example:
Current rating required = **250A**
Type required = **Figure 1** = **EN1-250-AP**
Air Side Option - Require Flag - choose **AS-2**
Oil Side Option – Require nuts on bottom – choose **OS-1**
Part number to order will be **EN1-250-APP-AS-2-OS-1**

zepworldwide
World leader in transformer accessories and premould connectors

1kV, 1000A and 1250A Versions

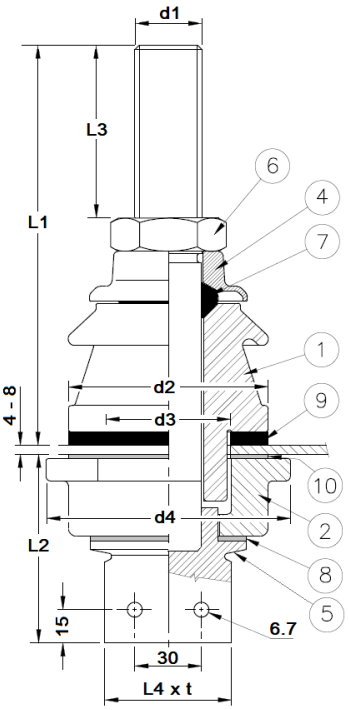

FIGURE 1

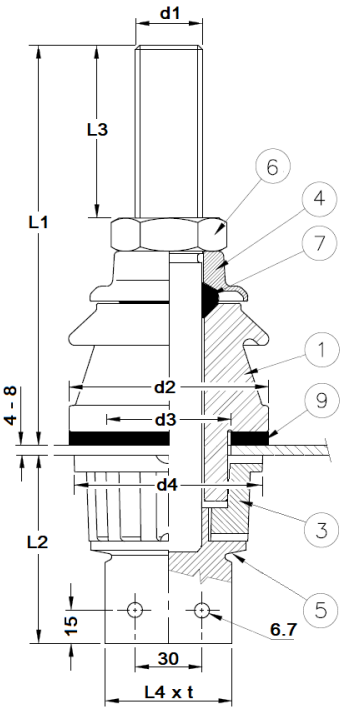

FIGURE 2

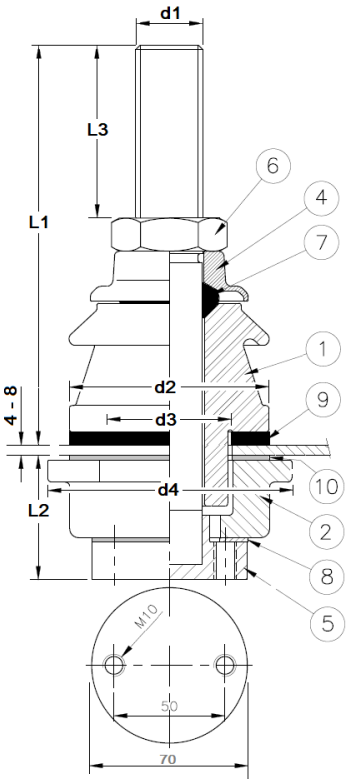

FIGURE 3

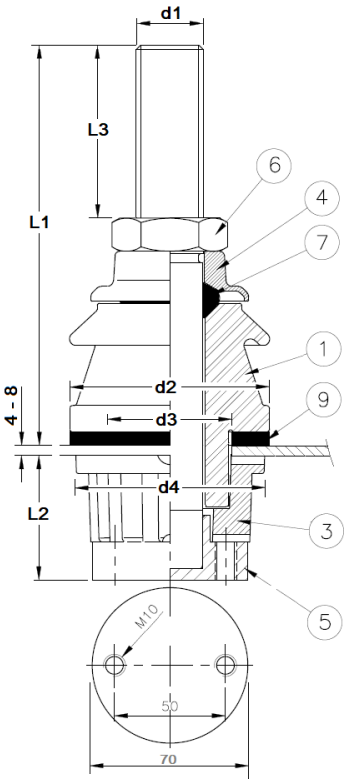

FIGURE 4

ZEPWW TYPE	FIGURE	kV	CURRENT	L1	L2	L3	L4	t	d1	d2	d3	d4	Stem Material
EN1-1000-AP	1	1	1000A	180	90	70	57	12	M30	90	56	110	BRASS
EN1-1000-APP	2	1	1000A	180	90	70	57	12	M30	90	56	90	BRASS
EN1-1000-SP	3	1	1000A	180	60	70	-	-	M30	90	56	110	BRASS
EN1-1000-SPP	4	1	1000A	180	60	70	-	-	M30	90	56	90	BRASS
EN1-1250-AP	1	1	1250A	180	90	70	57	12	M30	90	56	110	COPPER
EN1-1250-APP	2	1	1250A	180	90	70	57	12	M30	90	56	90	COPPER
EN1-1250-SP	3	1	1250A	180	60	70	-	-	M30	90	56	110	COPPER
EN1-1250-SPP	4	1	1250A	180	60	70	-	-	M30	90	56	90	COPPER

Position	DESCRIPTION	Position	DESCRIPTION	Position	DESCRIPTION
1	Porcelain	5	Terminal Stud	9	"N" Gasket
2	Porcelain	6	Nut	10	"X" Gasket
3	Insulator	7	“J” Gasket		
4	E Cap	8	"R" Gasket		

zepworldwide
World leader in transformer accessories and premould connectors

EN 50386 - 1kV 2000A Versions

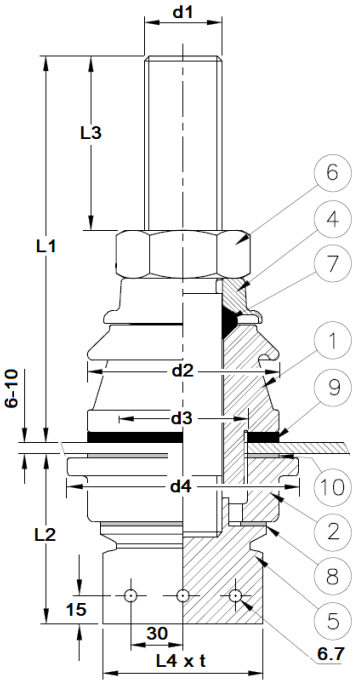

FIGURE 1

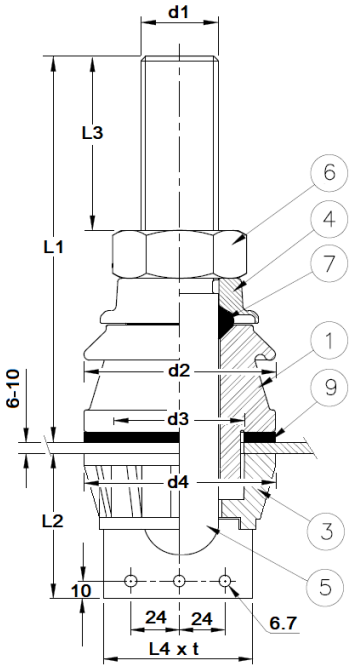

FIGURE 2

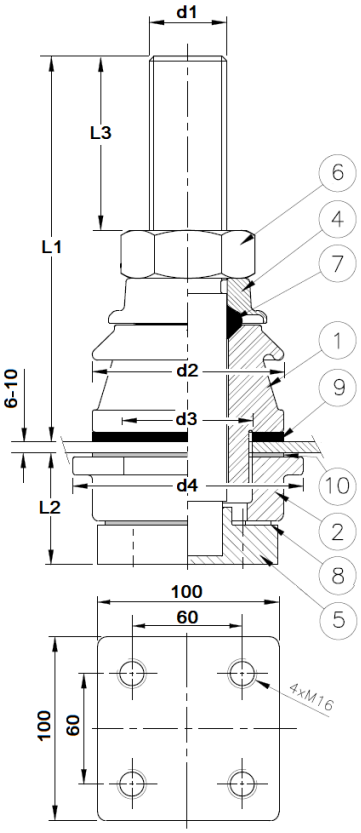

FIGURE 3

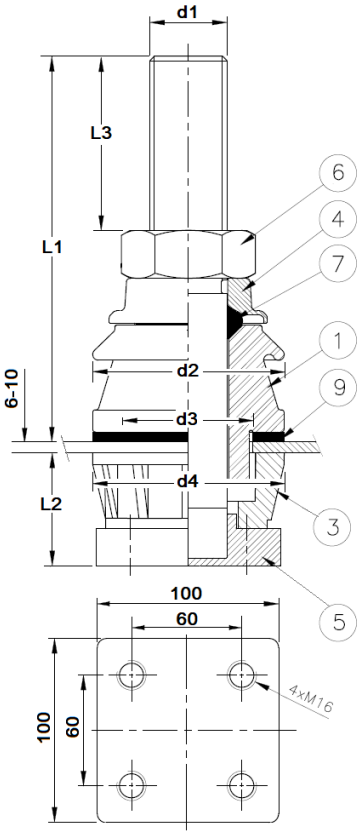

FIGURE 4

ZEPWW TYPE	FIGURE	kV	CURRENT	L1	L2	L3	L4	t	d1	d2	d3	d4
EN1-2000-AP	1	1	2000A	210	95	90	87	12	M42	104	70	125
EN1-2000-APP	2	1	2000A	210	84	90	80	11	M42	104	70	104
EN1-2000-SP	3	1	2000A	210	65	90	-	-	M42	104	70	125
EN1-2000-SPP	4	1	2000A	210	65	90	-	-	M42	104	70	104

Position	DESCRIPTION	Position	DESCRIPTION	Position	DESCRIPTION
1	Porcelain	5	Terminal Stud	9	"N" Gasket
2	Porcelain	6	Nut	10	"X" Gasket
3	Insulator	7	"J" Gasket		
4	E Cap	8	"R" Gasket		

zepworldwide
World leader in transformer accessories and premould connectors

EN 50386 - 1kV 3150A Versions

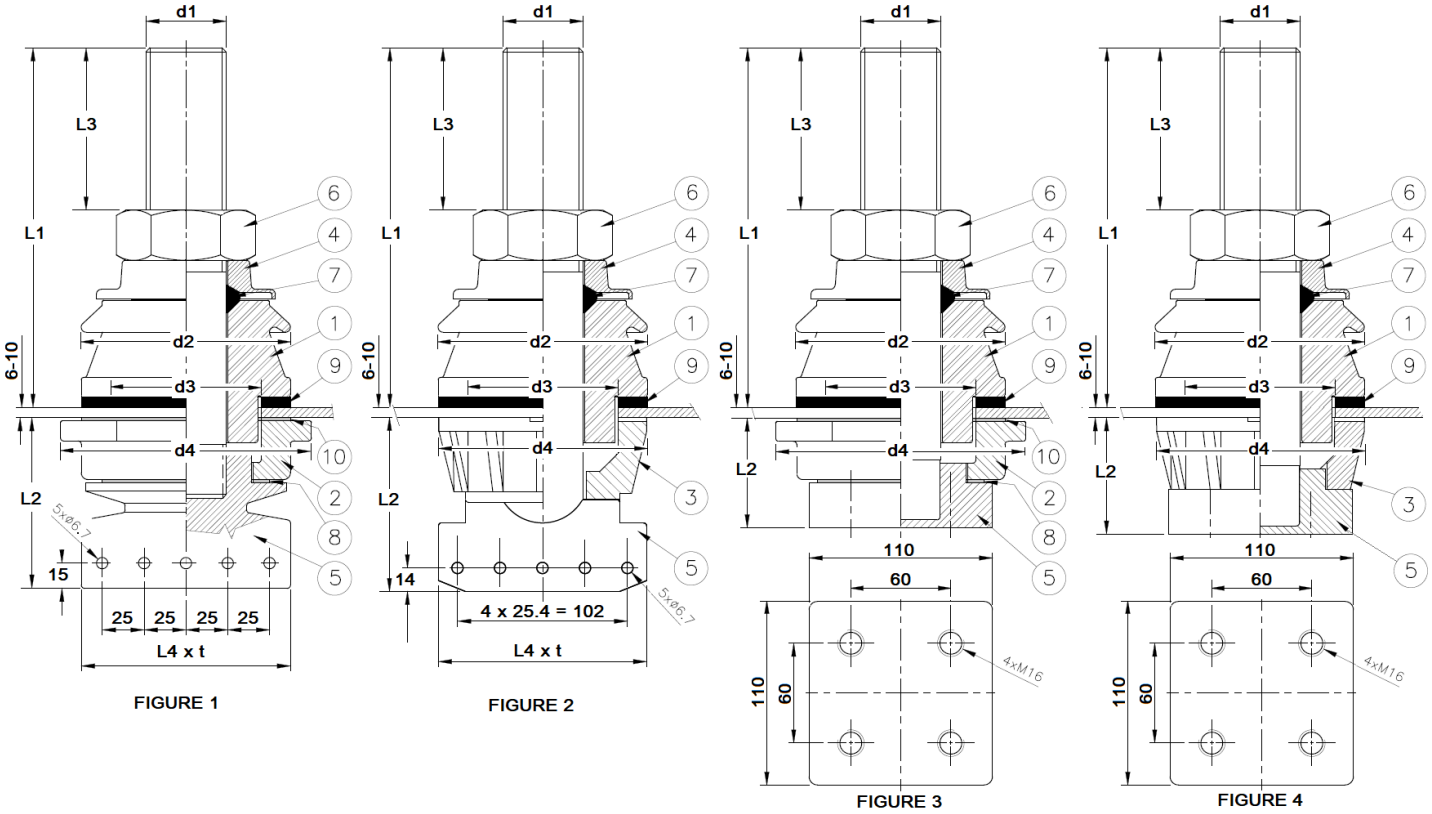

FIGURE 1 FIGURE 2 FIGURE 3 FIGURE 4

ZEPWW TYPE	FIGURE	kV	CURRENT	L1	L2	L3	L4	t	d1	d2	d3	d4
EN1-3150-AP	1	1	3150A	215	102	90	125	12	M48	125	90	150
EN1-3150-APP	2	1	3150A	215	104	90	125	11	M48	125	90	125
EN1-3150-SP	3	1	3150A	215	66	90	-	-	M48	125	90	150
EN1-3150-SPP	4	1	3150A	215	70	90	-	-	M48	125	90	125

Position	DESCRIPTION	Position	DESCRIPTION	Position	DESCRIPTION
1	Porcelain	5	Terminal Stud	9	"N" Gasket
2	Porcelain	6	Nut	10	"X" Gasket
3	Insulator	7	"J" Gasket		
4	E Cap	8	"R" Gasket		

zepworldwide
World leader in transformer accessories and premould connectors

EN 50386 – 1kV 4000A Versions

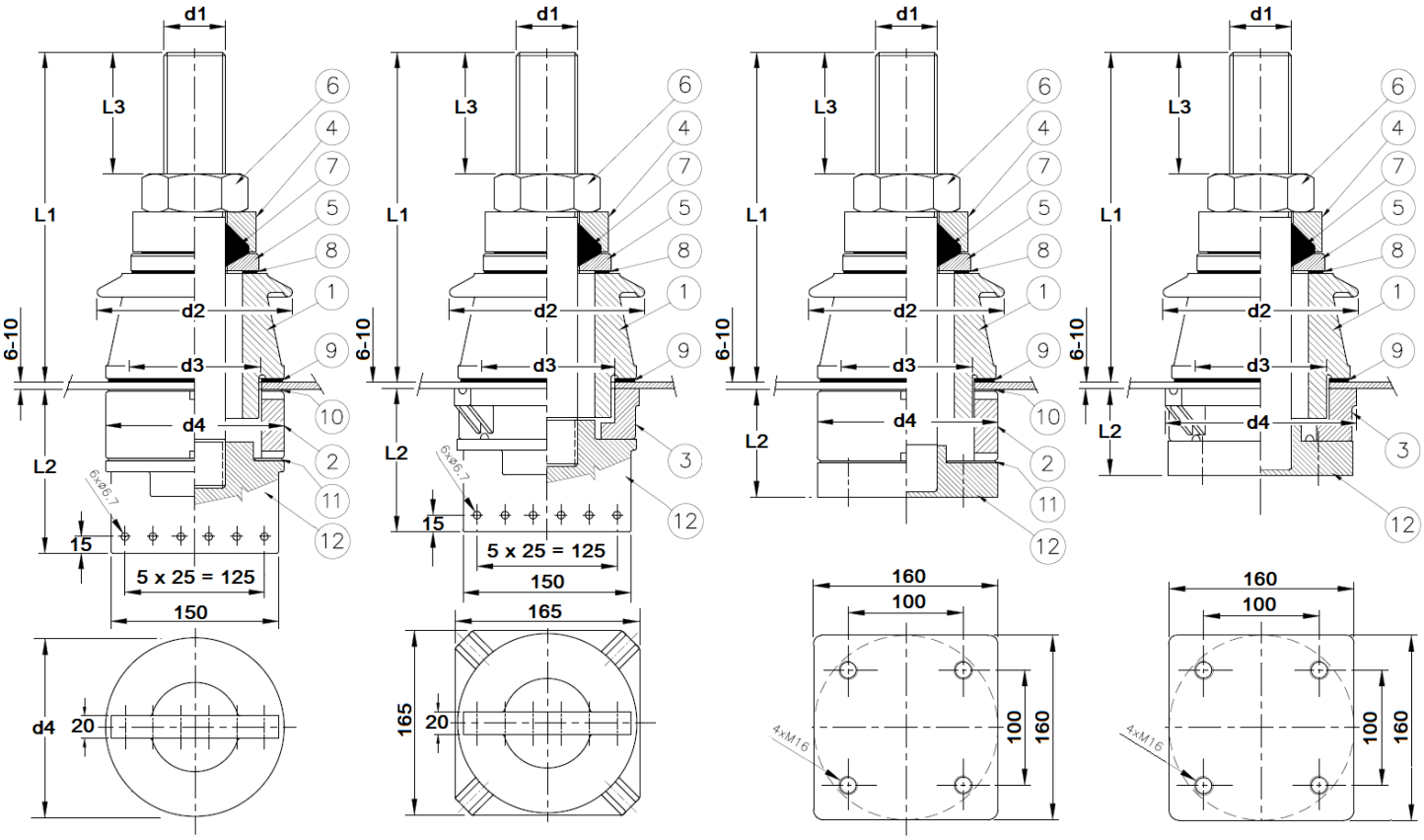

FIGURE 1 FIGURE 2 FIGURE 3 FIGURE 4

ZEPWW TYPE	FIGURE	kV	CURRENT	L1	L2	L3	d1	d2	d3	d4
EN1-4000-AP	1	1	4000A	296	147	110	M55	175	118	160
EN1-4000-APP	2	1	4000A	296	128	110	M55	175	118	165
EN1-4000-SP	3	1	4000A	296	94	110	M55	175	118	160
EN1-4000-SPP	4	1	4000A	296	75	110	M55	175	118	165

Position	DESCRIPTION	Position	DESCRIPTION	Position	DESCRIPTION
1	Porcelain	5	"E" Cap	9	"N" Gasket
2	Porcelain	6	Nut	10	"X" Gasket
3	Insulator	7	"J" Gasket	11	"R" Gasket
4	"G" Cap	8	"M" Gasket	12	Terminal Stud

zepworldwide
World leader in transformer accessories and premould connectors

EN 50386 - 1kV 5000A Versions

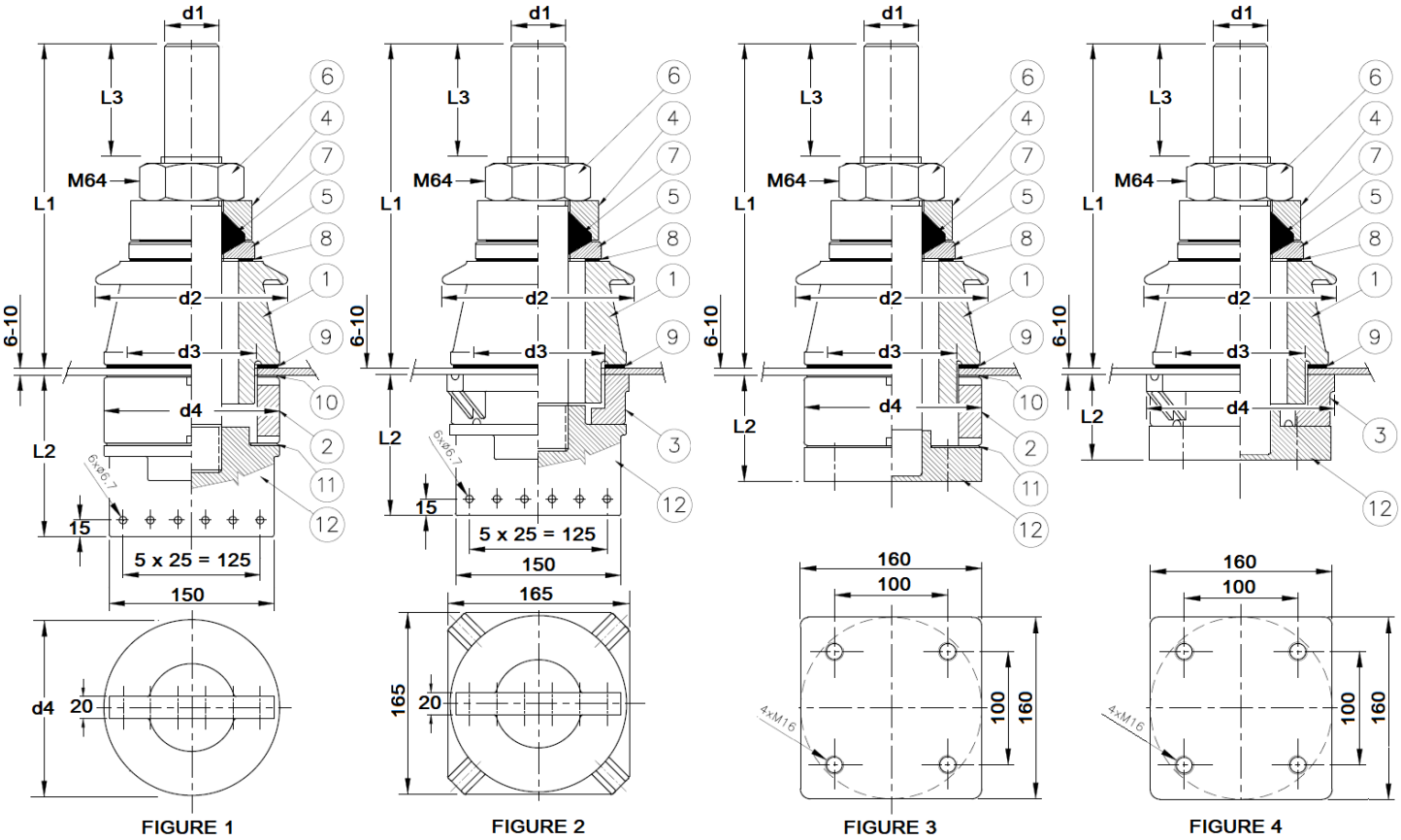

FIGURE 1 FIGURE 2 FIGURE 3 FIGURE 4

ZEPWW TYPE	FIGURE	kV	CURRENT	L1	L2	L3	d1	d2	d3	d4
EN1-5000-AP	1	1	5000A	316	147	105	58	175	118	160
EN1-5000-APP	2	1	5000A	316	128	105	58	175	118	165
EN1-5000-SP	3	1	5000A	316	97	105	58	175	118	160
EN1-5000-SPP	4	1	5000A	316	78	105	58	175	118	165

Position	DESCRIPTION	Position	DESCRIPTION	Position	DESCRIPTION
1	Porcelain	5	"E" Cap	9	"N" Gasket
2	Porcelain	6	Nut	10	"X" Gasket
3	Insulator	7	"J" Gasket	11	"R " Gasket
4	"G" Cap	8	"M" Gasket	12	Terminal Stud

zepworldwide
World leader in transformer accessories and premould connectors

EN 50386 – 1kV 6500A Versions

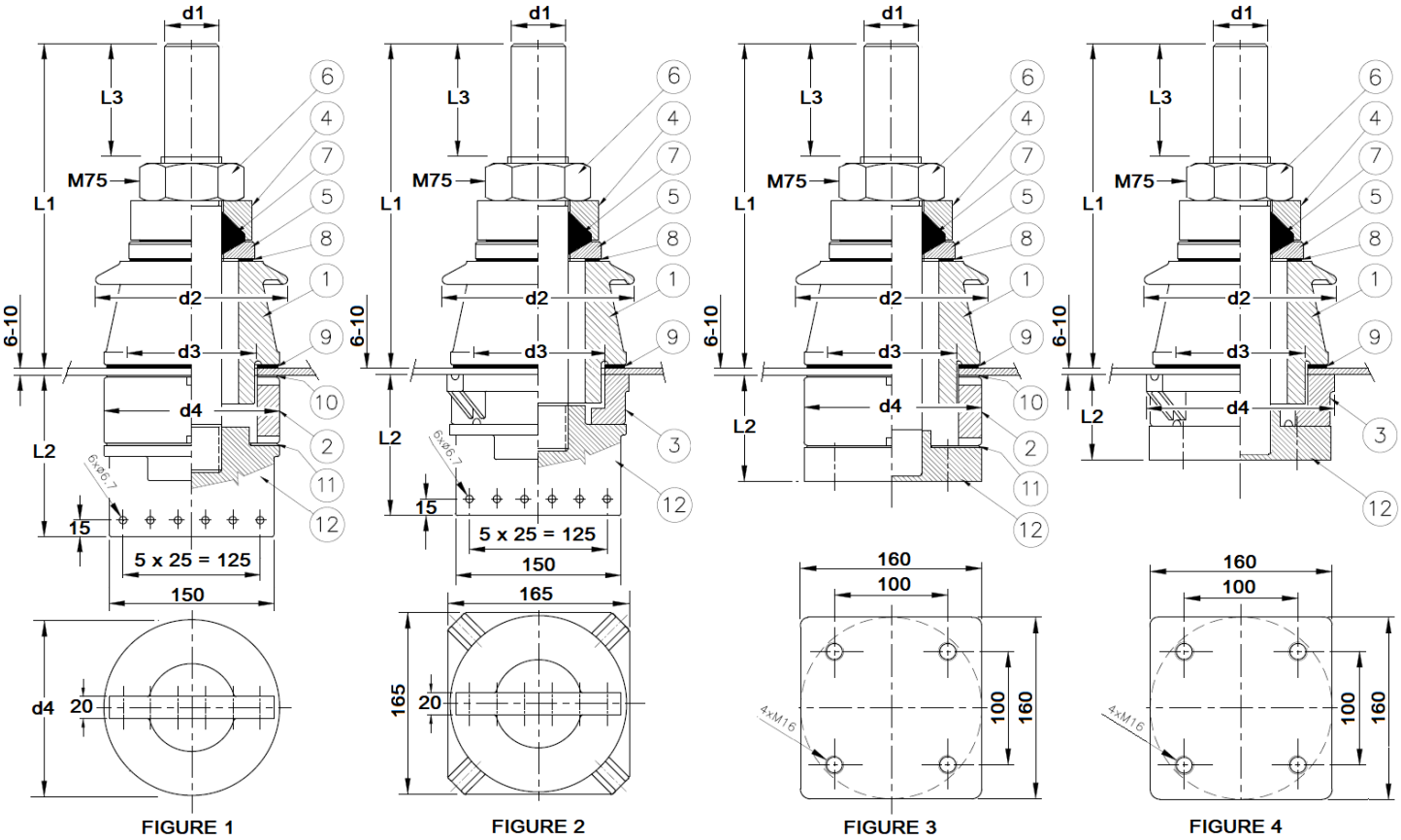

FIGURE 1 FIGURE 2 FIGURE 3 FIGURE 4

ZEPWW TYPE	FIGURE	kV	CURRENT	L1	L2	L3	d1	d2	d3	d4
EN1-6500-AP	1	1	6500A	325	147	105	71	175	118	160
EN1-6500-APP	2	1	6500A	325	128	105	71	175	118	165
EN1-6500-SP	3	1	6500A	325	97	105	71	175	118	160
EN1-6500-SPP	4	1	6500A	325	78	105	71	175	118	165

Position	DESCRIPTION	Position	DESCRIPTION	Position	DESCRIPTION
1	Porcelain	5	"E" Cap	9	"N" Gasket
2	Porcelain	6	Nut	10	"X" Gasket
3	Insulator	7	"J" Gasket	11	"R " Gasket
4	"G" Cap	8	"M" Gasket	12	Terminal Stud

DIN Bushing Flags / Palms for 250A to 6500A assemblies

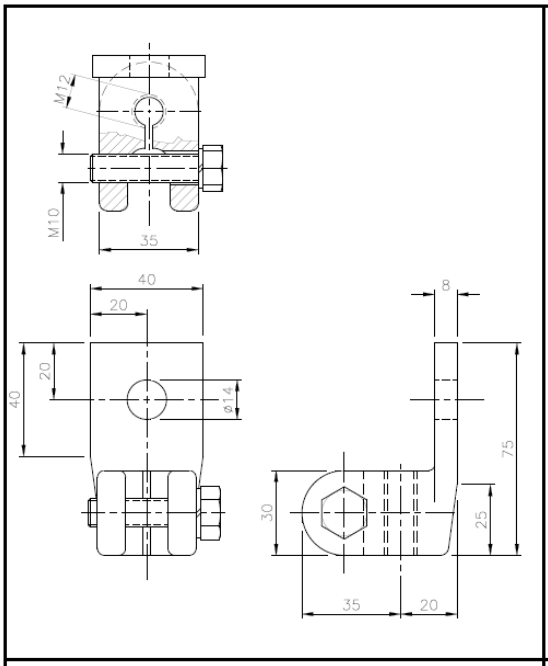

250A FORM DP TERMINAL FLAG
ZEPWW PART ID: 832500

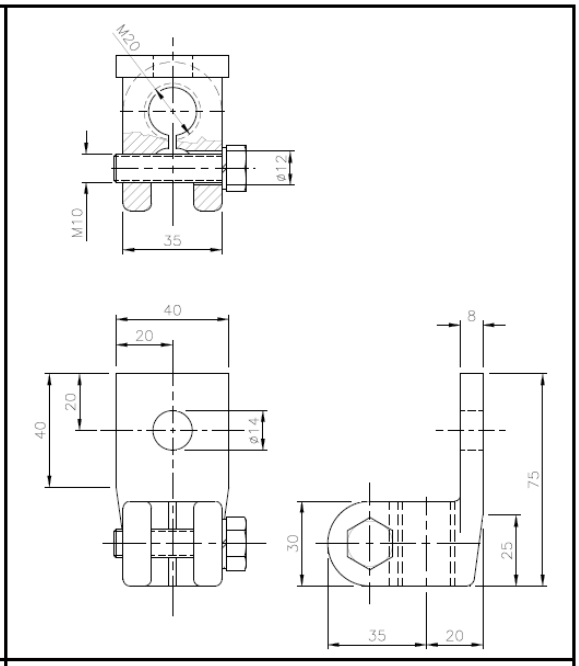

630A FORM DP TERMINAL FLAG
ZEPWW PART ID: 832400

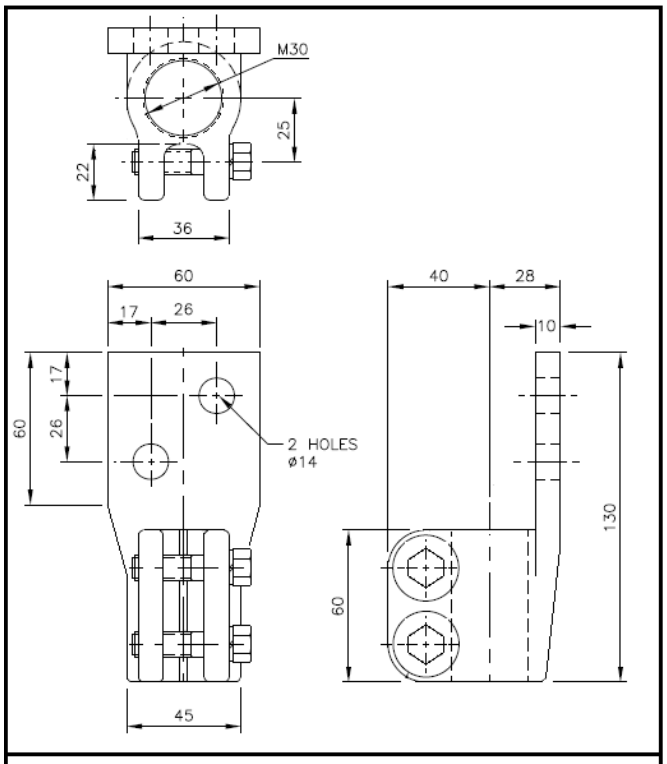

1000A FORM EP TERMINAL FLAG
ZEPWW PART ID: 832900

zepworldwide
World leader in transformer accessories and premould connectors

DIN Bushing Flags / Palms for 250A to 6500A assemblies – continued

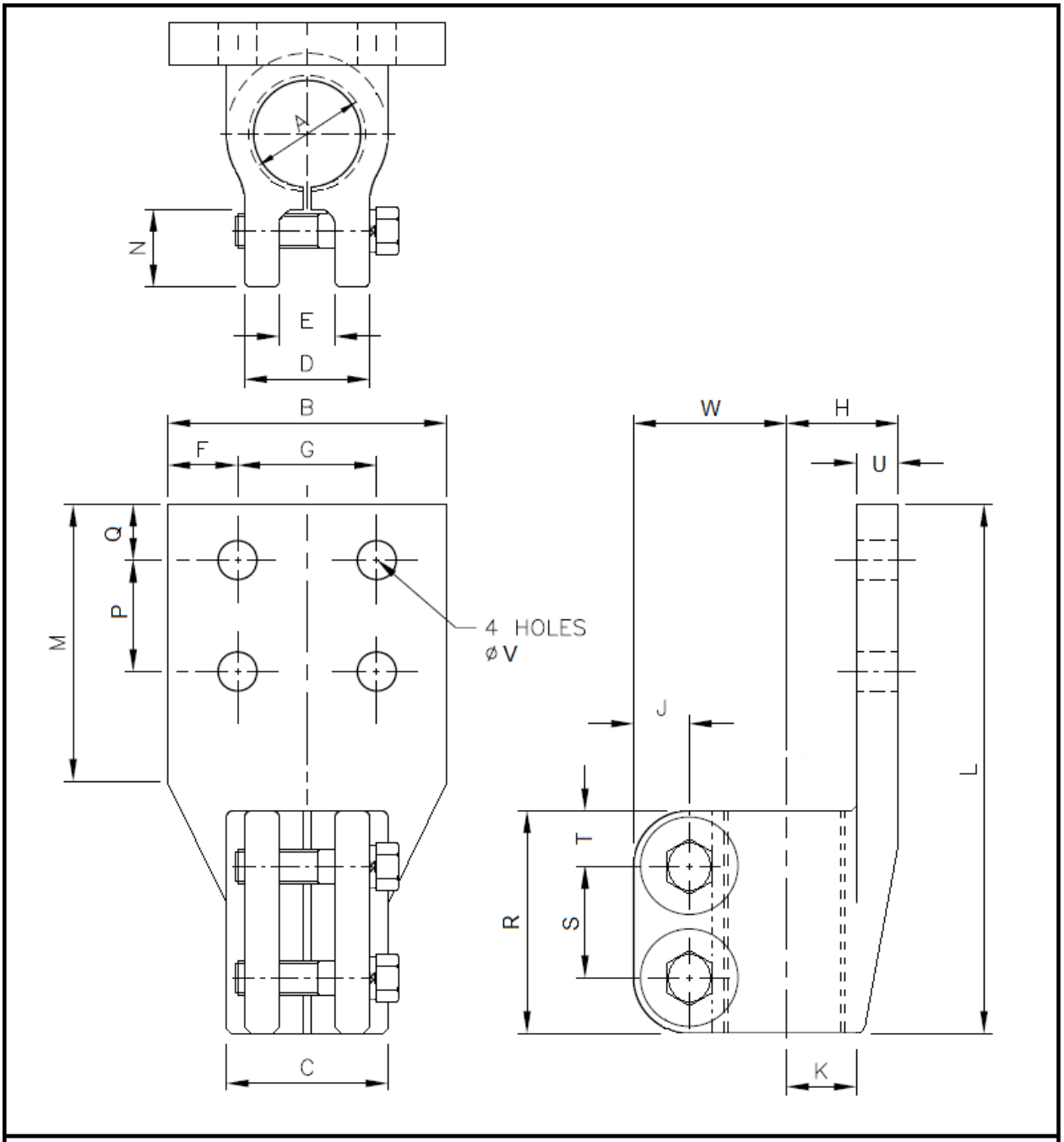

SIZE CHART FOR 2000A, 3150A AND 4500A BUSHING FLAGS

ZEPWW TYPE	RATING	A	B	C	D	E	F	G	H	J	K	L	M	N	P	Q	R	S	T	U	V	W
832300	2000A	M42x3	100	58	45	20	25	50	40	20	25	190	100	28	40	20	80	40	20	15	14	55
833000	3150A	M48x3	120	68	58	28	30	60	45	18	30	210	120	26	40	20	80	40	20	15	14	55
833450	4000A	M55x3	150	75	58	23	40	70	55	20	35	250	150	30	70	40	90	40	25	20	18	70

DIN Bushing Flags / Palms for 250A to 6500A assemblies - continued

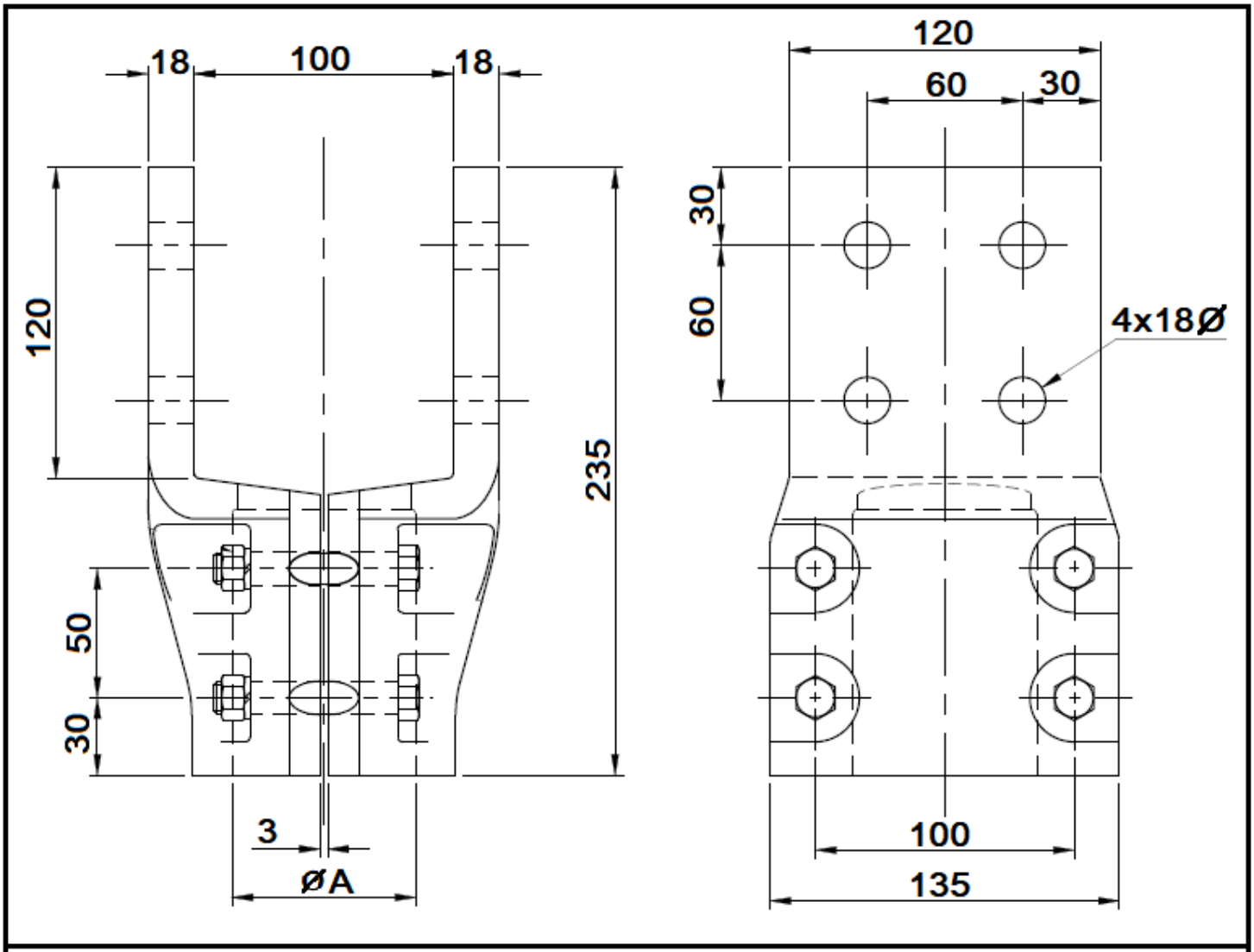

5000A & 6500A TERMINAL FLAG FORM

ZEPWW TYPE	RATING	AØ
833501	5000A	58mm
833651	6500A	71mm

zepworldwide
World leader in transformer accessories and premould connectors

Low Voltage Bushing Order Specification Sheet

Relevant Standard

- ☐ EN 50386
- ☐ DIN 42530

Voltage (kV)

- ☐ 1.2

Current (A)

☐ 250	☐ 630	☐ 1000
☐ 1250	☐ 2000	☐ 3150
☐ 4000	☐ 5000	☐ 6500

Active Parts Plating Type

☐ Without ☐ Tin Plated

Gasket Type (Operating Temeprature)

For -40°C / +120°C	For -20°C / +240°C	For -60°C / +220°C
☐ NBR	☐ FKM (Viton)	☐ FKMQ (Fluorosilicone)
☐ CORK (TD1049)		
☐ CORK (TD1)		

Other Requirements: - ……